WIZARD

Robotic policy adaptation via weight-space meta-learning

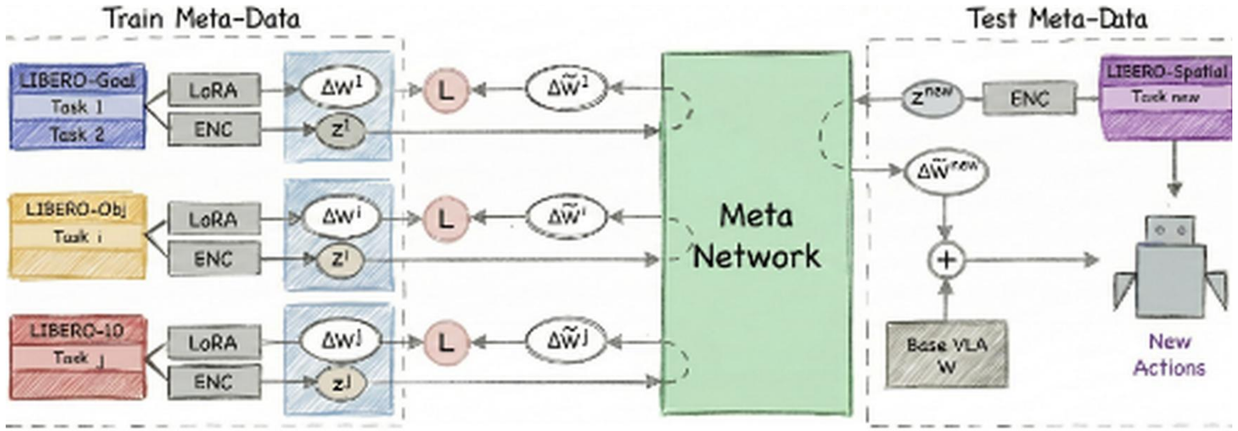
Bianchi C.♥, Yousefi S.♥, Sampieri A.♥, Roberti A.♦, Rigazio L.♥, Galasso F.♥♣, Franco L.♥
♥ ItalAI ♦ University of Verona ♣ Sapienza University of Rome

Results

LIBERO	$\pi_{0.5}$ FT	LoRA-Gen	WIZARD
Spatial	19%	28%	**40%**
Object	1%	1%	**3%**
Goal	14%	17%	**22%**
10: part 1	3%	5%	**9%**
10: part 2	3%	4%	**7%**

MetaWorld ML45	Success rate
NN retrieval	**44%**
Fine-tuned $\pi_{0.5}$	**58%**
LoRA-Gen	**60%**
WIZARD	**66%**

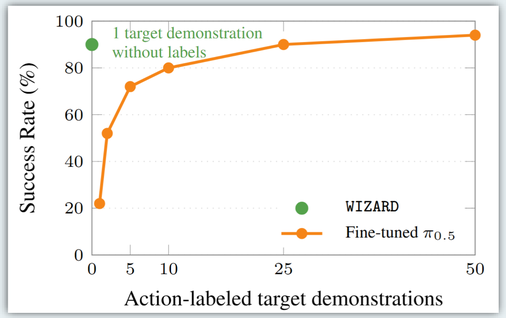
Real World	$\pi_{0.5}$ FT	WIZARD
Success rate	17%	**37%**

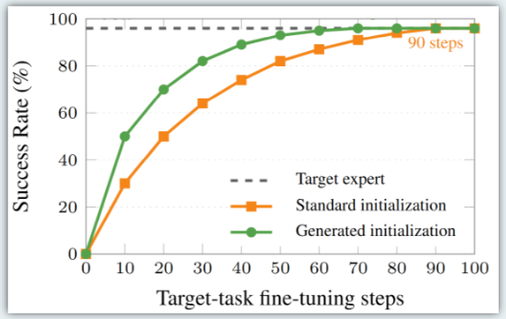


Overview

WIZARD generates LoRA updates for a frozen VLA using one visual demonstration and a language instruction. No target-task action labels or gradient updates. Source experts supervise adapter generation during training. At deployment, one instruction–video example generates a new adapter in a single forward pass.

Adaptation efficiency





References: $\pi_{0.5}$ – Physical Intelligence, 2025 · LIBERO – Liu et al., NeurIPS 2023 · Meta-World – Yu et al., CoRL 2019
LoRA – Hu et al., ICLR 2022 · LoRA-Gen – Xiao et al., 2025

Contact: Bianchi C., ItalAI · Left QR: project page · Right QR: portfolio